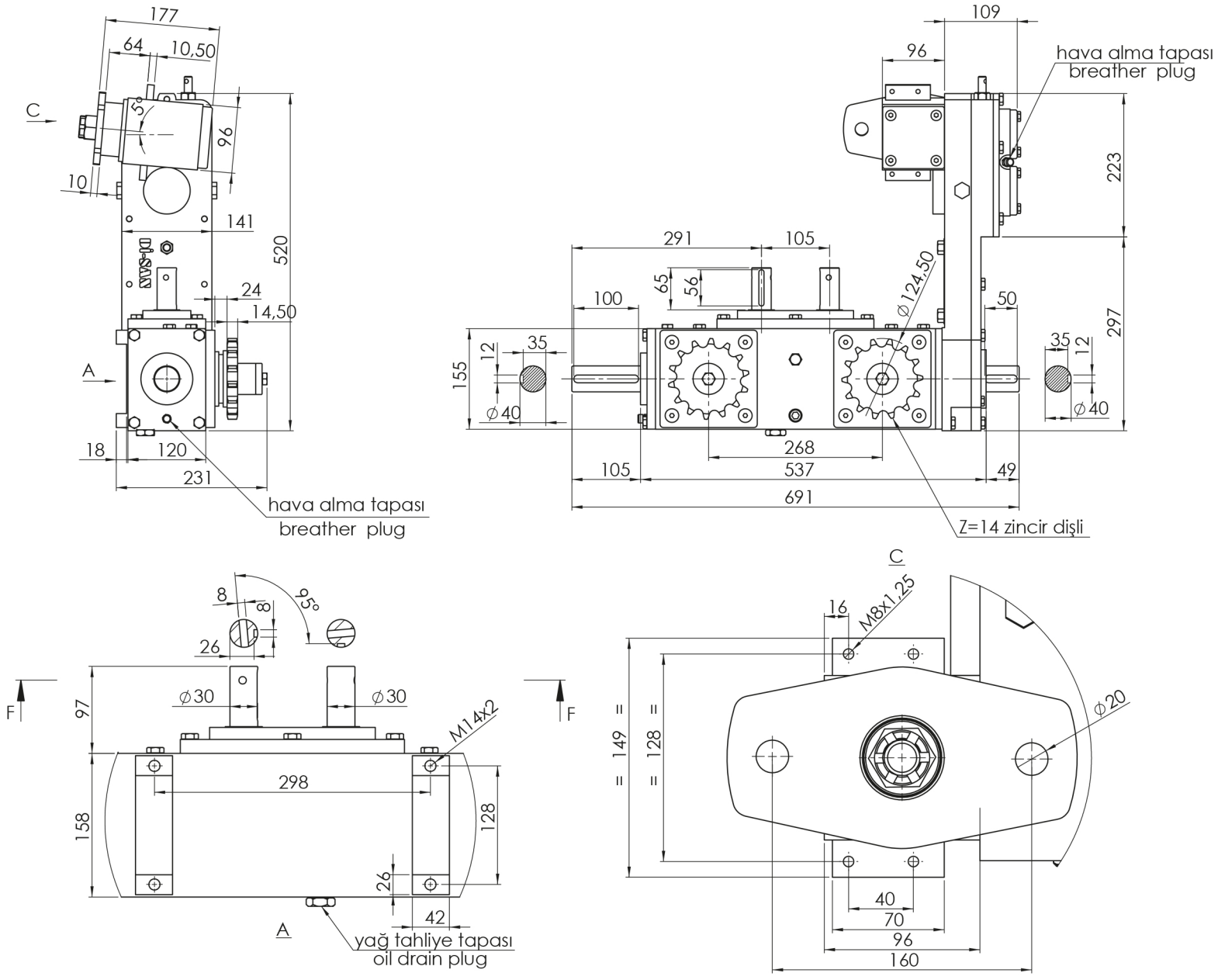
177
64
10,50
C
5°
96
10
141
520
24
14,50
A
18
120
231
hava alma tapası
breather plug
109
96
hava alma tapası
breather plug
223
291
105
65
56
100
⌀124,50
50
297
155
12
35
⌀40
35
12
⌀40
268
105
537
49
691
Z=14 zincir dişli
8
8
95°
26
F
97
⌀30
⌀30
M14x2
298
158
128
26
42
A
yağ tahliye tapası
oil drain plug
F
C
16
M8x1.25
149
128
⌀20
40
70
96
160